MASTECH®

MS2125A

Digital Clamp Meter
Operation Manual

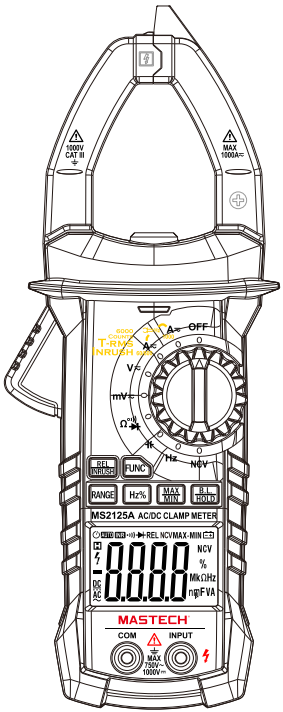

CONTENTS

1. Safety Information 01
1.1 Preliminary 01
1.2 Usage 02
1.3 Symbols 03
1.4 Maintenance 03
2. Description 04
2.1 Part Name 05
2.2 Switch, Button And Input Jack Description 07
2.3 LCD Display 07
3. Specifications 09
3.1 General 09
3.2 Technical Indicators 10
4. Operating Guidance 16
4.1 Reading Hold 16
4.2 Manual Measuring Range 17
4.3 Frequency/Duty Ratio Switch 17
4.4 Max./Min. Measurement Choice 18
4.5 Function Switch 18

MASTECH®

CONTENTS

4.6 REL/INRUSH Measurement 19
4.7 Back Light And Clamp Head Light 19
4.8 Automatic Power-Off 20
4.9 Measurement Preparation 20
4.10 Current Measurement 21
4.11 Voltage Measurement 21
4.12 Frequency And Duty Ratio Measurement 22
4.13 Resistance Test 25
4.14 Diode Test 26
4.15 Circuit Continuity Test 26
4.16 Capacitance Measurement 27
4.17 Surge Current Measurement 27
4.18 NCV Measurement 28
5. Maintenance 29
5.1 Replace Battery 29
5.2 Replace Probe 29
6. Accessories 30

1. Safety Information

⚠ **WARNING**

Be extremely careful when using this meter. Improper use of this device can result in electric shock or destruction of the meter. Take all normal safety precautions and follow the safeguards suggested in this manual. To exploit full functionality of the meter and ensure safe operation, please read carefully and follow the directions in this manual. If the equipment is used in a manner not specified by the manufacturer, the protection provided by the equipment may be impaired.

This meter is designed and manufactured according to safety requirements of EN 61010-1, EN 61010-2-032, EN 61010-2-033 concerning electronic measuring instruments with a measurement CAT III 1000V, CAT IV 600V and pollution degree 2 and safety requirements for hand-held clamps for electrical measurement and test.

1.1 Preliminary

1.1.1 When using the meter, the user should comply with standard safety rules:
- General shock protection
- Prevent misusing the meter

1.1.2 Please check for damage during transportation after receiving the meter.

1.1.3 If the meter is stored and shipped under hard conditions, please confirm if the meter is damaged.

1.1.4 Probe should be in good condition. Before use, please check whether the probe insulation is damaged and if the metal wire is bare.

1.1.5 Use the probe table provided with the meter to ensure safety. If necessary, replace the probe with another identical probe or one with the same

level of performance.

1.2 Usage

1.2.1 When using, select the right function and measuring range.

1.2.2 Don't measure by exceeding indication value stated in each measuring range.

1.2.3 When measuring a circuit with the meter connected, do not contact with probe tip (metal part).

1.2.4 When measuring, if the voltage to be measured is more than 60 V DC or 30 V AC (T-RMS), always keep your fingers behind finger protection device

1.2.5 Do not measure voltage greater than AC 750V.

1.2.6 In the manual measuring range mode, when measuring an unknown value, select the highest measuring range first.

1.2.7 Before rotating conversion switch to change measuring function, remove probe from the circuit to be measured.

1.2.8 Don't measure resistor, capacitor, diode and circuit connected to power.

1.2.9 During the test of currents, resistors, capacitors, diodes and circuit connections, be careful to avoid connecting the meter to a voltage source.

1.2.10 Do not measure capacitance before capacitor is discharged completely.

1.2.11 Do not use the meter in explosive gas, vapor or dusty environments.

1.2.12 If you find any abnormal phenomena or failure on the meter, stop using the meter.

1.2.13 Unless the meter bottom case and the battery cover are completely fastened completely, do not use the meter.

1.2.14 Don't store or use the meter in the conditions of direct sunlight, high temperature and high humidity.

1.3 Symbols

⚠	Note-Important safety information, refer to the instruction manual.
⚡	Application around and removal from UNINSULATED HAZARDOUS LIVE conductors is permitted.
⚠	Caution, possibility of electric shock
⧈	Equipment protected throughout by double insulation or reinforced insulation.
ETL c us Intertek	Conforms to UL STD. 61010-1, 61010-2-032, 61010-2-033; Certified to CSA STD C22.2 NO. 61010-1, 61010-2-032,61010-2-033
CE	Complies with European (EU) safety standards
⏚	Earth (ground) TERMINAL
⎓	Direct current
∼	Alternating current
≂	Both direct and alternating current
CAT III	It is applicable to test and measuring circuits connected to the distribution part of the building's low-voltage MAINS installation.
CAT IV	It is applicable to test and measuring circuits connected at the source of the building's low-voltage MAINS installation.

1.4 Maintenance

1.4.1 Don't try to open the meter bottom case to adjust or repair. Such operations can only be performed by technicians who fully understand the meter and electrical shock hazard.

1.4.2 Before opening the meter bottom case or battery cover, remove probe from the circuit to be measured.

1.4.3 To avoid wrong readings causing electric shock, when " 🔋 " appears on the meter display, replace the battery immediately.

1.4.4 Clean the meter with damp cloth and mild detergent. Do not use abrasives or solvents.

1.4.5 Power off the meter when the meter is not used. Switch the measuring range to OFF position.

1.4.6 If the meter is not used for long time, remove the battery to prevent the meter being damaged.

2. Description

- The meter is a portable, professional measuring instrument with LCD display and back light for easy reading by users. Measuring range switch is operated by single hand for easy operation with overload protection and low battery indicator. It is an ideal multifunction meter for professionals, factories, schools, fans and family use.
- The meter is used for AC current, DC current, AC voltage, DC voltage, frequency, duty ratio, resistance, capacitance measurement, circuit connection, diode test and non-contact voltage detection.
- The meter has automatic measuring range and manual measuring range.
- The meter has reading hold function.
- The meter has max. measuring function.
- The meter has min. measuring function.
- The meter has clamp head frequency measurement function.
- The meter has auto power-off function.
- The meter has relative measuring function.

2.1 Part Name

(1) Current clamp head: used for current measurement.
(2) Clamp head light
(3) Panel
(4) Trigger
(5) Function choice button (FUNC)
(6) Relative or inrush measurement button
(7) Frequency/duty ratio switch button (Hz/%)
(8) LCD display
(9) Common end jack
(10) Resistance, capacitance, voltage, frequency, diode and continuity input jack
(11) Maximum/minimum choice button (MAX/MIN)
(12) Reading hold/Back light button (B.L/ HOLD)
(13) Transfer switch
(14) NCV indicator
(15) Protective Barrier (to warn the operator of the limit of safe access)

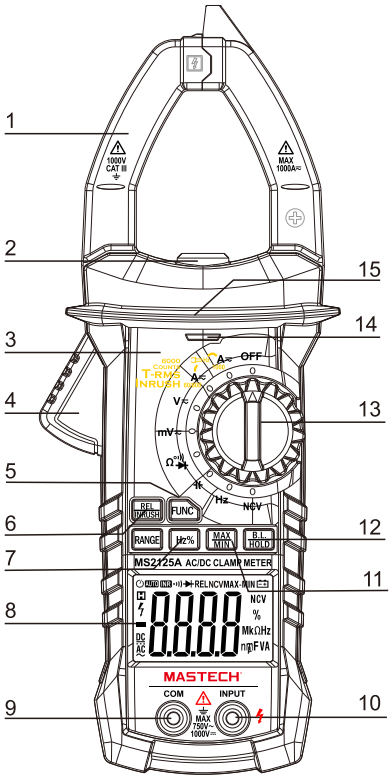

2.2 Switch, Button And Input Jack Description

B.L/HOLD button: used for reading hold or back light control
FUNC button: used for measuring function switch.
RANGE button: used for switching manual measuring range state.
REL/INRUSH button: button: used for entering relative measurement state or inrush current measurement.
Hz/% or inrush current measurement button: used for frequency and duty ratio measurement function switch.
MAX/MIN button: used for maximum/minimum measurement function switch.
OFF position: used for shutting off the power.
INPUT jack: voltage, resistance, frequency, duty ratio, capacitance, diode, circuit connection input wire connecting terminal.
COM jack: voltage, resistance, frequency, duty ratio, capacitance, diode, circuit connection common wire connecting terminal.
Transfer switch: used for selecting function and measuring range.

2.3 LCD Display

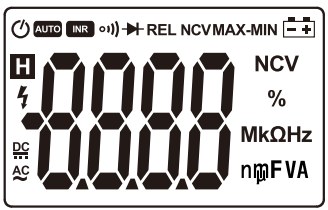

AC, DC	ALTERNATING CURRENT, direct current
	Diode, continuity
AUTO	Automatic measuring range mode
MAX	Maximum measurement state
MIN	Minimum measurement state
REL	Relative measurement mode
	Automatic power-off state
	LOW BATTERY
H	Reading hold state
%	Percentage (duty ratio)
mV,V	Millivolt, Volt (voltage)
A	Amperes (Current)
nF,μF,mF	Nano farad, Microfarad, Millifarad
Ω,kΩ,MΩ	Ohm, Kilohm, Megohm (resistance)
Hz,kHz,MHz	Hertz, Kilohertz, Megahertz (frequency)
NCV	Non-contact voltage detection

3. Specifications

The meter should be recalibrated under the condition of 18°C~28°C, relative humidity less than 75% with the period of one year.

3.1 General

Automatic measuring range and manual measuring range.
Full measuring range overload protection.
The maximum allowable voltage between measurement end and ground: 1000V DC or 750V AC
Operational height: maximum 2000m
Display: LCD
Displayed maximum value: 5999 digit.
Polarity indication: automatical indication, '-' means negative polarity.
Exceeding measuring range display: 'OL' or '-OL'.
Sampling rate: about 3 times/sec.
Unit display: has function and power unit display.
Auto off time: 15 min
Power supply: DC 9V battery (type NEDA 1604, 006P or 6F22)
Battery undervoltage indication: LCD displays symbol.
Temperature coefficient: less than 0.1×accuracy/°C
Operational temperature: 18°C~28°C
Storage temperature: -10°C~50°C
Dimension: 238×92×50mm
Weight: about 420g (include battery)

3.2 Technical Indicators

Environment temperature: 23±5°C, relative humidity (RH):<75%

3.2.1 True T-RMS Zero Input Characteristic

3.2.1.1 For measuring non-sinusoidal wave signal, uses true T-RMS measuring method, which has less error than traditional average response measuring method.

3.2.1.2 The true T-RMS meter can accurately measure non-sinusoidal wave signal, but if it is in AC function mode, when there is no signal to be measured (input terminal short circuit in AC voltage mode), clamp meter may show a reading from 1 to 50. These deviating readings are normal. In the designated measurement range, they will not affect the accuracy for multimeter measuring AC.

3.2.1.3 The true T-RMS can be measured only when input signal reaches a certain level. Therefore, the measuring range of AC voltage and current should be specified at 2% ~100% of full range.

3.2.2 AC Current

Measuring range	Resolution	Accuracy
60A	0.01A	±(2.0% reading + 8 digits)
600A	0.1A	
1000A	1A	

- Maximum input current: 1000A AC
- Maximum input current: 0~600A: 40~400Hz; 600A~1000A: 40~60Hz

3.2.3 DC Current

Measuring range	Resolution	Accuracy
60A	0.01A	±(2.0% reading + 8 digits)
600A	0.1A	
1000A	1A	

- Maximum input current: 1000A DC

3.2.4 Surge Current

Measuring range	Resolution	Accuracy
60A	0.01A	< 60A for reference only
600A	0.1A	±(5% reading + 60 digits)
1000A	1A	

Time of integration: 100ms; measurement range: 20~1000A; frequency range: 40~400Hz

3.2.5 DC Voltage

Measuring range	Resolution	Accuracy
60mV	0.01mV	±(0.5% reading + 5 digits)
600mV	0.1mV	
6V	0.001V	
60V	0.01V	
600V	0.1V	
1000V	1V	±(0.8% reading + 4 digits)

- Input impedance: 10MΩ
- Maximum input voltage: 750V AC (T-RMS) or 1000V DC

Note:

In the small voltage measuring range, the probe is not connected with the circuit to be tested, and the meter may have fluctuating readings, which is normal and caused by the meter's high sensitivity. This does not affect actual measurement results.

3.2.6 AC Voltage

Measuring range	Resolution	Accuracy
60mV	0.01mV	±(0.6% reading + 5 digits)
600mV	0.1mV	
6V	0.001V	
60V	0.01V	
600V	0.1V	
750V	1V	±(0.8% reading + 4 digits)

- Input impedance: 10MΩ
- Maximum input voltage: 750V AC (T-RMS) or 1000V DC
- Frequency range: 40 ~ 400Hz

Note:

In the small voltage measuring range, the probe is not connected with the circuit to be tested, and the meter may have fluctuating readings, which is normal and caused by the meter's high sensitivity. This does not affect actual measurement results.

3.2.7 Frequency

3.2.7.1 Clamp head measuring frequency (through mode A):

Measuring range	Resolution	Accuracy
99.99Hz	0.01Hz	±(1.5% reading + 5 digits)
999.9Hz	0.1Hz	

- Measuring scope: 10Hz~1kHz
- The input signal range: ⩾20A AC (T-RMS)(input current will increase when the frequency to be measured increases)
- Maximum input current: 1000A (T-RMS)

3.2.7.2 Through mode V:

Measuring range	Resolution	Accuracy
99.99Hz	0.01Hz	±(1.5% reading + 5 digits)
999.9Hz	0.1Hz	
9.999kHz	0.001kHz	

- Measuring scope: 10Hz ~ 10kHz
- The input voltage range: ⩾20mV AC (T-RMS) (input voltage will increase when the frequency to be measured increases)
- Input impedance: 10MΩ
- Maximum input voltage: 750V AC (T-RMS)

3.2.7.3 Through mode HZ/DUTY:

Measuring range	Resolution	Accuracy
9.999Hz	0.001Hz	±(0.3% reading + 5 digits)
99.99Hz	0.01Hz	
999.9Hz	0.1Hz	
9.999kHz	0.001kHz	
99.99kHz	0.01kHz	
999.9kHz	0.1kHz	
9.999MHz	0.001MHz	

- Overload protection: 250V DC or AC (T-RMS)
- The input voltage range: ⩾ 2V (input voltage will increase when the frequency to be measured increases)

3.2.8 Duty Ratio

Measuring range	Resolution	Accuracy
0.1-99.9%	0.1%	±3.0%

3.2.8.1 Through mode A (from clamp head):
- Frequency response: 10~1kHz
- Input current range: ⩾ 20A AC (T-RMS)
- Maximum input current: AC 1000A

3.2.8.2 Through mode V:
- Frequency response: 10~10kHz
- Input voltage range: ⩾ 60mV AC
- Input impedance: 10MΩ
- Maximum input voltage: 750V AC (T-RMS)

3.2.8.2 Through mode HZ/DUTY:
- Frequency response: 10 ~ 10MHz
- The input voltage range: ⩾ 2V AC (T-RMS) (input voltage will increase when the frequency to be measured increases)
- Maximum input voltage: 250V AC (T-RMS)

3.2.9 Resistance

Measuring range	Resolution	Accuracy
600Ω	0.1Ω	±(0.8% reading + 3 digits)
6kΩ	0.001kΩ	
60kΩ	0.01kΩ	
600kΩ	0.1kΩ	
6MΩ	0.001MΩ	±(2.0% reading + 5 digits)
60MΩ	0.1MΩ	

- Open circuit voltage: about 0.5V
- Overload protection: 250V DC or AC (T-RMS)

3.2.10 Circuit Continuity Test

Measuring range	Resolution	Accuracy
)))	0.1Ω	If the resistance of circuit to be measured is less than 50Ω, the meter's built-in buzzer may sound.

- Overload protection: 250V DC or AC (T-RMS)

3.2.11 Capacitance

Measuring range	Resolution	Accuracy
9.999nF	0.001nF	±(3.0% reading + 5 digits)
99.99nF	0.01nF	
999.9nF	0.1nF	
9.999μF	0.001μF	
99.99μF	0.01μF	
999.9μF	0.1μF	
9.999mF	0.001mF	
99.99mF	0.01mF	

- Overload protection: 250V DC or AC (T-RMS)

3.2.10 Diode Test

Measuring range	Resolution	Function
⊣▶⊢	0.001V	Display approximate diode forward voltage value

- Forward DC current is about 1mA
- Backward DC voltage is about 3V
- Overload protection: 250V DC or AC (T-RMS)

4. Operating Guidance

4.1 Reading Hold

1) In the process of measurement, if reading hold is required, press **"HOLD/B.L"** key, the value on the display will be locked. Press **"HOLD/B.L"** key again to cancel reading hold state.

4.2 Manual Measuring Range

RANGE key is automatic/manual measuring range key to trigger mode. The preset one is automatic measuring range. Press to switch to manual measuring range. In the manual measuring range mode, click once to change to upper range. Continue to the top range, then continue to press this key to change to the bottom range, followed by recycling. If this key is pressed more than 2 sec, it will switch back to automatic measuring range state.

Note:

In capacitance and frequency measurement state, rhw manual measuring range button is invalid.

4.3 Frequency/Duty Ratio Switch

1) When the meter is in AC voltage mode, if **"Hz/%"** button is pressed, the meter will measure Hz, and measure AC voltage, AC current signal frequency. Click **"Hz/%"** button again, the meter will measure DUTY cycle, and measure voltage and current signal duty ratio. If it is in HZ/DUTY position, pressing **HZ %** key will switch between HZ and DUTY by recycling.
2) If **"Hz/%"** button is pressed again, the meter will revert to voltage, current measurement state.

Note:

The meter is in the maximum/minimum value measurement state, it can't switch to frequency, duty ratio measurement mode.

4.4 Max/Min Measurement Choice

1) Press **"MAX/MIN"** key to enter MAX mode, and always keep measurement maximum value; press **"MAX/MIN"** key again, the meter will enter minimum value measurement state; press **"MAX/MIN"** key for the third time, the meter will display the difference of maximum and minimum value; press **"MAX/MIN"** key to repeat the above operations by recycling.
2) After entering MAX or MIN mode, it will automatically save the measured maximum or minimum value.
3) If the user presses **"MAX/MIN"** key more than 2 sec, the meter will restore normal measuring range.

Note:

1) When the meter is in the maximum/minimum value measurement state, it is in manual measuring range mode.
2) When the meter is in the frequency, duty ratio measurement state, it can't switch to maximum/ minimum value measurement mode.

4.5 Function Switch

1) In the resistance mode, press **"FUNC"** button, it will switch among resistance, diode and continuity detection by recycling.
2) In the voltage and current mode, press **"FUNC"** button to switch between AC and DC.

4.6 REL/INRUSH Measurement

1) REL/INRUSH button is relative value measurement button. Operated by tapping this button, it will enter relative value measurement mode. The current display value can be stored in the memory as reference value. When the user measures later, the display value is the difference for input value minus reference value. ie. REL△(current reading)= Input value - Reference value.
2) The relative value measurement can only be performed in the manual mode.
3) In the AC current measurement state, press REL/ INRUSH more than 2 sec to enter surge measuring state.

4.7 Back Light And Clamp Head Light

1) In the process of measurement, if ambient light is too dark to read, press **"B.L/HOLD"** key to open the backlight, the backlight will automatically turn off after about 30 seconds.
2) During this period, pressing **"B.L/ HOLD"** key more than two seconds will turn off backlight.
3) In the current mode, the meter will turn on backlight and, at the same time, it will turn on clamp head light. Backlight is LED with high current draw. The backlight will turn off in about 30 seconds. If backlight is used often, it will shorten battery life, so do not use backlight excessively.

Note:

When battery voltage ≤ 7.2V, the LCD displays "[-+]" (undervoltage) symbol. When the user uses the backlight, the battery voltage drops below 7.2 V, due to high working current. The "[-+]"symbol may appear, and measurement accuracy is not guaranteed. Contimue to use the meter normally without using backlight.
Do not replace the battery until "[-+]" symbol shows under normal cnditions.

4.8 Automatic Power-Off

1) If there is no operation during any 15 minutes after turning the machine on, the meter will enter suspended stated, automatically powering off to save the battery. Within 1 minute before shutdown, buzzer will sound five times. The meter will then enter a dormant state.
2) After automatic power-off, press FUNC key, the meter will turn on again.
3) If the user holds "**FUNC**" key when powering on, it will cancel automatic power-off function.

4.9 Measurement Preparation

1) Turn the transfer switch to turn on the power. When battery voltage is low (about≤7.2V), LCD displays "[-+]" symbol, Replace the battery.
2) "⚠" symbol means that input voltage or current should not be more than the specified value, which is to protect the internal line from damage.
3) Place transfer switch to required measuring function and range.
4) When connecting line, first connect the common test line, then connect charged test line. When removing line, remove charged test line first.

4.10 Current Measurement

> ⚠Warning
> **Electric shock hazard.**
> **Remove the probe from the meter before measuring with current clamp.**

1) Measuring switch is placed to position A. At this time, the meter is in AC current measurement state. Choose appropriate measuring range.
2) If you want to measure DC current, press FUNC button to enter direct current measurement state.
3) Hold the trigger, open clamp head, clip one lead of measurement circuit to be tested inn the clamp.
4) Read the current value on the LCD display.

Note:

1) Clamping two or more leads of circuit to be tested simultaneously will not get the correct measuring results.
2) To get accurate reading, connect the lead to be tested at the center of current clamp.
3) "⚠"indicates that maximum input AC current is 1000 A.
4) In order to improve the measurement precision, in the DC current measurement state, if the LCD display is not zero, press REL back to zero, then measure.

4.11 Voltage Measurement

> ⚠Warning
> **Electric shock hazard.**
> **Pay special attention to avoid shock when measuring high voltage.**
> **Don't input voltage more than AC750 T-RMS.**

1) Insert black probe to **COM** jack, insert red probe to **INPUT** jack, choose appropriate measuring range.
2) Place transfer switch to AC voltage V≈ or mV position. At this time, the meter is in the DC voltage measurement state. To measure AC voltage, press FUNC button to enter AC voltage measurement state.
3) Connect the probe with voltage source or both ends of load in parallel for measurement.
4) Read the voltage on the LCD.

Note:

1) In the small voltage measuring range, the probe is not connected with the circuit to be tested, and the meter may have fluctuating readings, which is normal and caused by the meter's high sensitivity. When the meter is connected with the circuit to be tested, you will get actual measured value.
2) In the relative measurement mode, automatic measuring range is invalid.
3) "⚠"indicates that maximum input voltage is 750V AC or 1000V DC. Maximum input voltage at mode mV is 600mV DC or AC.
4) If the readings measured by the meter is more than 750V rms AC, it will send out "beep" alarm.

4.12 Frequency And Duty Ratio Measurement

1) Clamp head measuring frequency (through AC current):

> ⚠Warning
> **Electric shock hazard.**
> **Remove the probe from the meter before measuring with current clamp.**

(1) Measuring switch is placed to position A .
(2) Hold the trigger, open clamp head, clip one lead of measurement circuit to be tested in the clamp.
(3) Press **Hz/%** key to switch to frequency measuring state.
(4) Rad the current value on the LCD display.
(5) Pressing **Hz/%** again can enter duty ratio measuring state.

Note:

(1) Clamping two or more leads of circuit to be tested simultaneously will not get the correct measuring results.
(2) Frequency measurement range is 10Hz~1kHz the frequency to be tested is less than 10Hz, or if frequency is higher than 10 kHz, accuracy is not guarantee
(3) Duty ratio measuring range is 10 ~ 95%.
(4) "⚠"means that maximum input current is 1000A AC (T-RMS).

2) In Voltage Measurement Mode:

> **⚠Warning**
> **Electric shock hazard.**
> **Pay special attention to avoid shock when measuring high voltage.**
> **Don't input voltage more than AC 750 T-RMS.**

(1) Insert black probe to **COM** jack, insert red probe to **INPUT** jack.
(2) Place transfer switch to **V≈** or **m̃V** position, press FUNC to enter AC voltage measurement state.
(3) Prss **"Hz/%"** key to switch to frequency measuring state.

(4) onnect the probe with signal or both ends of load in parallel for measurement.
(5) VRead on the LCD.
(6) Pressing "**Hz/%**"again can enter duty ratio measurig state.

Note:

(1) Frequency measurement range is 10Hz~1kHz
When the frequency to be tested is less than 10Hz,the LCD will show "00.0" Masuring frequency higher than 10kHz is possible, but ccuracy is ot guarantee
(2) Duty ratio measuring range is 10 ~ 95%.
(3) "⚠ "means that maximum input voltage is 750V AC (T-RMS).

3) In HZ/DUTY Measurement Mode:

> **⚠Warning**
> **Electric shock hazard.**
> **Pay special attention to avoid shock when measuring high voltage.**
> **Don't input voltage more than AC 250V T-RMS.**

(1) Insert black probe to **COM** jack, insert red probe to **NPUT** ack.
(2) Transfer switch is placed to position **HZ.**
(3) Connect the probe with signal or both ends of load in parallel for measurement.
(4) Read on the LCD.
(5) Pressing **"Hz/%"** again can enter duty ratio measuring state.

Note:

Frequency measurement range is 10Hz~1kHz When the frequency to be tested is more than 10Hz,the LCD will show “00.0”measuring frequency higher than 10 kHz is possible, but accuracy is not guarantee

4.13 Resistance Test

> ⚠**Warning**
>
> **Electric shock hazard.**
> **When measuring circuit impedance, determine that the power supply is disconnected and the capacitor in the circuit is completely discharged.**

1) Insert black probe to **COM** jack, insert red probe to **INPUT** jack.
2) Place measuring range switch to Ω position. At this time, the meter is in the measurement state.
3) Connect the probe to the both ends of resistor or circuit to be tested for measurement.
4) LCD will show readings.

Note:

1) When the input end is open, LCD shows “0L” outrange state.
2) When the resistance to be tested>1M, the meter reading will stablilizee after a few seconds, which is normal for high resistance readings.

4.14 Diode Test

1) Insert black probe to **COM** jack, insert red probe to **INPUT** jack.
2) Measuring switch is placed to position Ω.
3) Press “FUNC” key to switch to measuring state.
4) Connect the red probe to diode anode and connect the black probe to diode cathode to make test.
5) Read on the LCD.

Note:

1) What the meter shows is approximation of diode forward voltage drop.
2) If the probe has reverse connection or the probe is open, the LCD will show “0L”.

4.15 Circuit Continuity Test

> ⚠**Warning**
>
> **Electric shock hazard.**
> **When measuring circuit continuity, determine that the power supply is disconnected and the capacitor in the circuit is completely discharged.**

1) Insert black probe to COM jack, insert red probe to **INPUT** jack.
2) Measuring switch is placed to position Ω
3) Press **“FUNC”** key to switch to circuit continuity measuring state.
4) Connect the probe to the both ends of circuit to be tested for measurement.
5) If the resistance of circuit to be measured is less than 50Ω, the meter's built-in buzzer may sound.
6) Read the circuit resistance value on the LCD.

Note:

If the probe is open or circuits resistance to be tested is more than 600Ω, the display will show “0L”.

4.16 Capacitance Measurement

> ⚠Warning
> **Electric shock hazard.**
> **To avoid electric shock, before measuring capacitance, discharge capacitance completely.**

1) Insert black probe to COM jack, insert red probe to **INPUT** jack.
2) Measuring switch is placed to position ⊣⊢
3) After discharging capacitance completely, connect the probe to the both ends of capacitor to be tested for measurement.
4) Read the capacitance on the LCD.

Note:

To improve the accuracy below 10nF measuring value, subtract the distributed capacitance of meter and cable.

4.17 Surge Current Measurement

> ⚠Warning
> **Electric shock hazard.**
> **Remove the probe from the meter before measuring with current clamp.**

4.10.1 Measuring switch is placed to position A.

4.10.2 Hold the trigger, open clamp head, clip one lead of measurement circuit to be tested in the clamp.

4.10.3 Press **“REL/INRUSH”** button more than 2 sec. to enter surge current measurement mode. The LCD will show “- - - -”, until motor start is detected. The meter shows and keeps the surge current value.

4.10.4 Read the current surge value on the LCD display.

Note:

1) Clamping two or more leads of circuit to be tested simultaneously will not get the correct measuring results.
2) To get accurate reading, connect the lead to be tested at the center of current clamp.
3) If, in the manual measuring range mode, the LCD shows “OL”, which indicates overrange, choose a higher measuring range.
4) In the manual measuring range mode, if you don't know the value to be measured in advance, choose the highest measuring range.
5) “ ⚠ ”means that maximum input current is 1000A AC (T-RMS).

4.18 NCV Measurement

1) Turn the meter to NCV mode.
2) Place the meter top close to the conductor. When test voltage is greater than 110 Vac (T-RMS), when the meter is close to the conductor, the meter induction voltage indicator will turn on and the buzzer will give an alternating high-low alarm sound.

Note:

1. Even there is no indication, voltage may exist still. Don't use non-contact voltage detector to judge whether there is voltage in the wire. Detection operation could be affected by socket design, insulation thickness, type and other factors.

2. When inputting voltage on the meter input terminal, due to the existence of the induced voltage, voltage induction indicator also may light.
3. External sources of interference (such as flashlight, motor, etc.) may incorrectly trigger non-contact voltage detection.

5. Maintenance

5.1 Replace Battery

> ⚠ **WARNING**
> **To avoid electric shock, make sure that the test leads have been clearly move away from the circuit under measurement before opening the battery cover.**

1. If the symbol " appears, it means that the batteries should be replaced.
2. Loosen the screw of the battery cover and remove it.
3. Replace the used battery with a new one.
4. Return the battery cover and tighten the screw.

Note: The battery polarity can't be reversed.

5.2 Replace Probe

Replace test leads if leads become damaged or worn.

> ⚠ **WARNING**
> **Use meet EN 61010-031 standard, rated CAT III 1000V, or better test leads.**

> ⚠ **WARNING**
> **To avoid electric shock, make sure the probes are disconnected from the measured circuit before removing the rear cover. Make sure the rear cover is tightly screwed before using the instrument.**

6. Accessories

1)	Test Probe	1 pair
2)	Operating Manual	1 pcs
3)	9V DC battery (6FF2)	1 pcs
4)	Case	1 pcs

00-05-4368